EXCLUSIVE DISTRIBUTOR
COLTERLEC™

EXCALIBUR
LIGHTING

HIGH BAY LIGHTING

HALO

HIGH BAY LIGHTING

HALO

- Reliable choice for linear and area fixtures
- IK10
- IP66
- Adjustable wattage select - 100% / 75% / 50%
- 3CCT colour changing - 3000K / 4000K / 5000K
- Long lasting and high reliability

TYPICAL APPLICATIONS

Tunnels, Supermarkets, Large Retailers, Schools, Billboards, Commercial Buildings, Airports, Stadiums, Train Stations, Bus Stations, Warehouses, Parking Lots, Exhibition Stadiums, Gas Stadiums, Toll Stadiums.

SPECIFICATIONS

Model: Optical Characteristics	EXHAL15075	EXHAL240120
Rated Wattage	150W / 75W	240W / 120W
Lumens	12200 - 24400	19200 - 38400
Wattage Select	100% / 75% / 50%	100% / 75% / 50%
System Efficacy	Up to 160Lm/W	
Light Source	SMD 2825 LEDs	
Driver	Sosen	
Colour Temperature CCT	3CCT Colour Select (3000K/4000K/5000K)	
CRI (Ra)	>70	
Reported L70	>50,000 Hours	
Lens Optic Type	120°	
Electrical Characteristics		
Input	AC 100-277V	
Frequency	50/60Hz	
Powerfactor	>0.95	
Total Harmonic Distortion	<15%	
Environment		
IP Rating	IP66	
Impact Rating	IK10	
Operating Temperature	-40°C To 50°C	
Product Material and Mounting		
Option 1	Eyebolt (Trunnion Mount Available Upon Request)	
Product Material	Aluminium	
Lens / Optics Material	Polycarbonate Lens	
Dimensions and Weights		
Product Dimensions	320*138*180*203*195	350*146*188*210*225
Product Weight	2.9KG	4.0KG
Packaging Dimensions (Carton 6)	370*370*180	400*400*180
Gross Weight	3.6KG (CTN 1)	4.8KG (CTN1)
Warranty and Certifications		
Warranty	5 Year Warranty	
Certifications	RCM	

HIGH BAY LIGHTING

DIMENSIONS

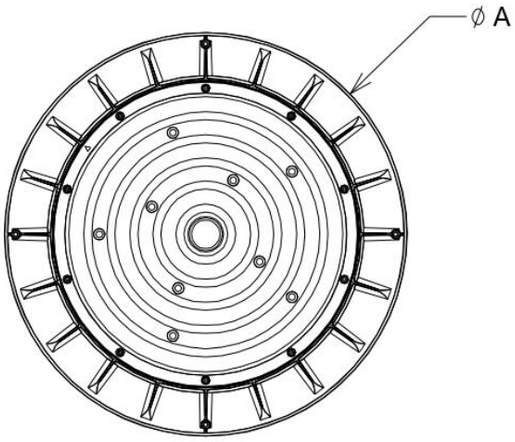

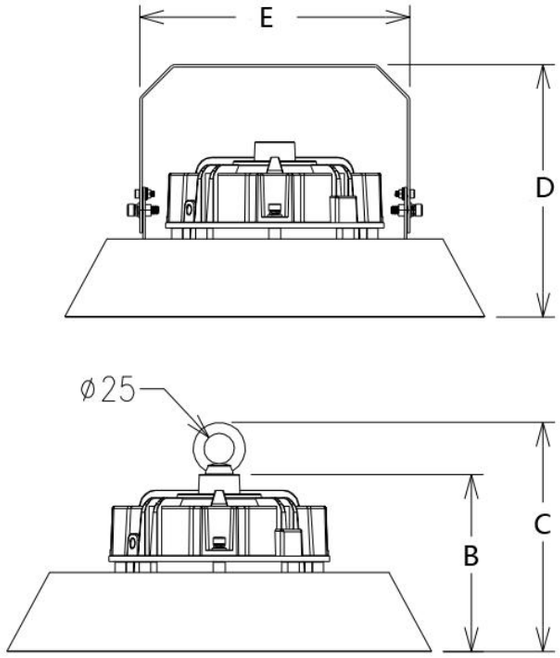

Wattage	A(mm)	B(mm)	C(mm)	D(mm)	E(mm)
150W/75W	320	138	180	203	195
240W/120W	350	146	188	210	225

PHOTOMETRIC DIAGRAMS

Beam Angle 120°

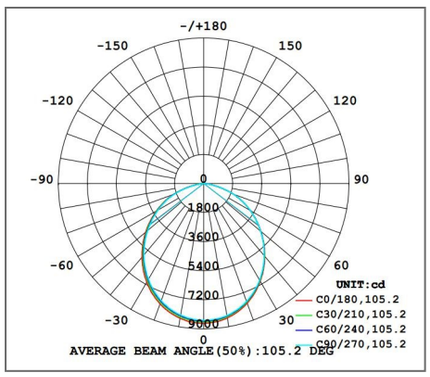

120°

EXCALIBUR LIGHTING

HIGH BAY LIGHTING

ORDERING METHODOLOGY

EX-HAL **XXXXXX WATTS**

15075
240120