MADE IN UK

TE'S CROMPTON INSTRUMENTS

INTEGRA 1221 DIGITAL METERING SYSTEM

FEATURES

- DIN 96 enclosure
- Backlit LCD screen
- Voltage IN-OUT connections
- CT current measurement 5A/1A
- Plug and socket connections
- Programmable VT, CT ratios
- Modbus™ RTU
- Individual harmonics to 63rd
- Non-volatile memory 1MB

APPLICATIONS

- Commercial Buildings Disclosures
- Nabers
- National Construction Code (NCC)
- Greenstar Energy Management

APPROVALS

- IEC BS EN 61010-1:2010
- BS EN 61326-1:2013
- IEC 62053-21 Class 1
- IEC 62053-24 Class 1

The Crompton Instruments Integra 1221 digital metering system (dms) from TE Connectivity enables cost effective solution for the measurement and display of all electrical parameters including total harmonic distortion (THD) and individual, up to the 63rd harmonic.

DISPLAY

High definition screen features programmable backlight for high contrast visibility in low light and direct sunlight applications. The light can be programmed to automatically dim after set period of time for energy saving.

New "petal" array icons shows the percentage of full scale power of the measured system and the instantaneous power factor (PF) measurement gives clear PF indication. Total power consumption is displayed on the screen at all time.

Q2C WIRING SOLUTION

Integra 1221 dms and the 3-in-1 current transformers include RJ12 plugs and sockets for easy connectivity and installation and the solution is available with wired looms to reduce assembly time and connection errors. IN-OUT voltage connections reduce wiring and installation time.

COMMUNICATION

Modbus RTU (RS485) available on all models. Two pulsed outputs available on self powered only.

ENCLOSURE AND SYSTEM

The DIN 96 panel mounted enclosure includes integral panel mounting clips for quick and easy fitting and to suit user requirements, the range includes single-phase, three-phase three-wire and three-phase four-wire capability, all selectable at the point of installation.

COLTERLEC™

For more information
Call 1300 36 26 26 | sales@colterlec.com.au | www.colterlec.com.au

DIMENSIONS

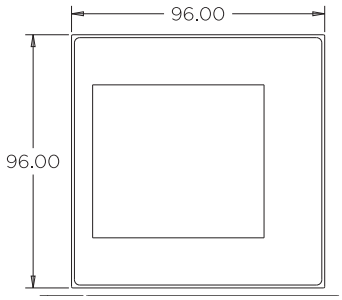

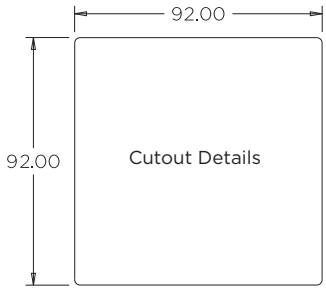

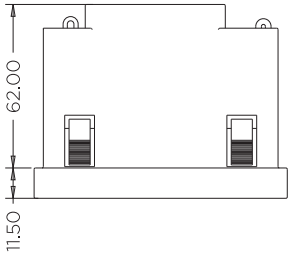

DISPLAYED PARAMETERS

- Voltage per phase L-N, L-L
- Current per phase and Max Demand
- Power Factor – per phase and system
- Total Harmonic Distortion – Voltage and Current per phase
- Neutral current
- Frequency system
- Phase Sequence
- Active Power (P) per phase, total and Max Demand
- Reactive Power (Q) per phase, total and Max Demand
- Apparent Power (S) per phase, total and Max Demand
- Energy – Active and Reactive Importing and Total
- Energy – Active and Reactive Exporting and Total

AUXILIARY AND SELF POWERED WIRING DIAGRAMS

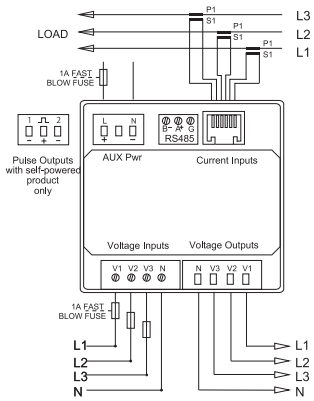

3-phase 4-wire

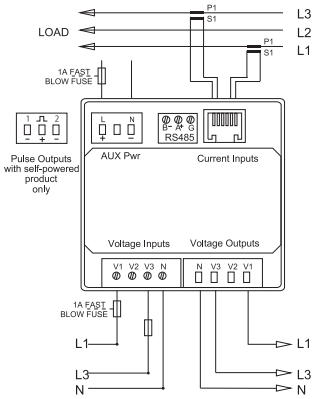

3-phase 3-wire

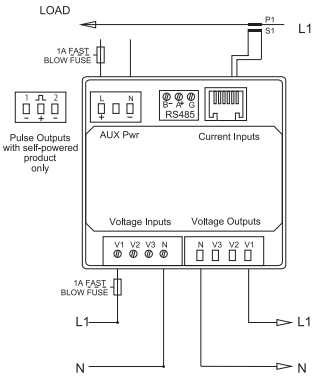

1-phase 2-wire

PRODUCT CODES	
Description	**Part number**
INTEGRA 1221 multifunction panel meter LCD Display. Input 480 V L-L 2 pulsed outputs, Modbus RS485 Self powered	INT-1221-S-010
INTEGRA 1221 multifunction panel meter LCD Display Input 480 V L-L Modbus RS485 Auxiliary powered	INT-1221-M-010

SPECIFICATIONS	
Input	
Nominal input voltage	57.7 – 276 V AC L-N (100-480 V L-L) 576 V L-L MAX
Max. continuous input overload voltage	120% of nominal
Max. short duration input voltage	2 x nominal voltage for 1 second
Nominal input voltage burden	< 0.2 VA per phase
Nominal input current	100 mA
Nom. Input current burden	< 0.1 VA
Max. continuous input overload current	120% of nominal
Max. short duration input current	20 x nominal current for 1 second
Auxiliary Powered	
Operating range	57.7-276 V L-N (100-480 L-L) AC/DC 50/60 Hz or Self powered from any phase
Supply burden	<5 VA
Accuracy	
Voltage (V)	+/- 0.5% of range maximum
Current (A)	+/- 0.5% of range maximum
Frequency (Hz)	+/- 0.2% of mid-frequency
Power factor (PF)	+/- 1% of unity (0.01)
Active power (W)	+/- 0.5% of reading
Reactive power (VAr)	+/- 0.5% of reading
Apparent power (VA)	+/- 0.5% of reading
Active energy (kWh)	+/- 0.5% of reading to IEC 62053-21
Reactive energy (kVArh)	+/- 0.5% of reading to IEC 62053-24
THD	2% to 63rd harmonic
Measured Range	
Voltage (V)	5 – 120% of nominal (Min 100 V – self powered)
Current (A)	5 – 120% of nominal
Frequency (Hz)	44 – 66 Hz
Power (W, VAr, VA)	5 – 144% of nominal (bi-directional)
Energy	8 digit, upto 9999999.9 MWh
Power factor	4 quadrant
THD	0 – 40% upto 63rd harmonic
Environment	
Operating temperature	-25˚C to +70˚C
Storage temperature	-40˚C to +80˚C
Relative humidity	0 to 95%, non-condensing
Shock	30 g in 3 planes
Vibration	10 Hz to 50 Hz, IEC 60068-2-6, 2 g
Surge voltage	4 kV (IEC 61000-4-5)
Impulse voltage	6 kV (IEC 60060-1)
Electromagnetic immunity	80 MHz - 2 GHz at 10 V/m IEC 61000-4-3
Electrostatic discharge	15 kV (IEC 61000-4-2)
Altitude	3000 m
Warm-up	1 minute
Outputs	
Pulsed outputs (self powered only)	Opto-coupled, potential-free SPST-NO contact
Contact rating current	50 mA at 230 V AC 27 mA at 27 V DC
Contact rating voltage	5-27 V DC
Pulse width	60/100/200 ms
Pulse rate	0.001/0.01 /0.1/1/10/100/1000 kWh/kVArh
Pulsed output relay (non-configurable)	2400IMP/kWh
Communications	Modbus RTU (RS485)
Type	2-wire half duplex
Baud rate	2400, 4800, 9600, 19200, 38400
Address	1 to 247
Enclosure	
Enclosure style	DIN 96 panel mount
Dimensions	96x96x62 mm
Panel cut-out	92x92 mm
Panel thickness	1-5 mm
Protection rating	Front IP54, Rear IP30, IP65 (with panel gasket)
Material	UL 94-VO
Weight	340 g
Cable size	0.05 mm² – 2.5 mm² stranded wire
Terminals	Voltage and Current : Shrouded screw clamp

PARAMETERS		
Button	**Scr**	**Parameter**
ESC Ph S	1	Watts L1 Volts L1 Current L1 Active Energy L1
	2	Watts L2 Volts L2 Current L2 Active Energy L2
	3	Watts L3 Volts L3 Current L3 Active Energy L3
	4	Watts L1 Volts L1 Current L1 Reactive Energy L1
	5	Watts L2 Volts L2 Current L2 Reactive Energy L2
	6	Watts L3 Volts L3 Current L3 Reactive Energy L3
V/A	1	L-N Volts L1, L2, L3
	2	L-L Volts L1, L2, L3
	3	Current L1, L2, L3, N
	4	V-THD% per line
	5	I-THD% per line
	6	Phase Sequence V&I
MD PF Hz	1	PF and System Freq
	2	PF per phase
	3	MD per phase
	4	System Max demand P, Q, S.
P	1	Active Power (P) L1, L2, L3
	2	Reactive Power (Q) L1, L2, L3
	3	Apparent Power (S) L1, L2, L3
	4	System Powers P,Q,S
E	1	Imp Active Energy Exp Active Energy
	2	Imp Reactive Energy Exp Reactive Energy
	3	Total Active Energy Total Reactive Energy

3-IN-1 CURRENT TRANSFORMERS

The 3-in-1 current transformer range are for use with the Integra 1221 digital metering system which combines three traditional current transformers in one moulding case with a RJ12 connection for simple and easy error free installation.

PRODUCT CODES	PRIMARY CURRENT	VA AT CLASS 1	VA AT CLASS 0.5
DL3N1-35-60/0.1	60A	0.25	-
DL3N1-35-125/0.1	125A	0.5	0.25
DL3N1-35-160/0.1	160A	0.35	0.25
DL3N1-35-250/0.1	250A	0.5	0.25
DL3N1-45-250/0.1	250A	0.25	-
DL3N1-45-400/0.1	400A	-	0.25
DL3N1-45-600/0.1	600A	-	0.25
DL3N1-70-400/0.1	400A	-	0.25
DL3N1-70-600/0.1	600A	-	0.25
DL3N1-70-800/0.1	800A	-	0.25

VOLTAGE METER TO METER LOOM

The meter to meter loom connects the voltage for upto 32 meters using high quality LSZH cable fitted with suitable plugs and socket for safe and easy voltage connections.

Part Number	Length
Q2C-VMM-0600-01	600 mm
Q2C-VMM-0900-01	900 mm
Q2C-VMM-1200-01	1200 mm
Q2C-VMM-1500-01	1500 mm
Q2C-VMM-2000-01	2000 mm
Other lengths available	

VOLTAGE METER TO OPEN LOOM

The meter to open loom connects the voltage supply from the fused connections to the meter using high quality LSZH cable fitted with suitable plugs and socket for safe and easy voltage connections.

Part Number	Length
Q2C-VFO-0600-01	600 mm
Q2C-VFO-1000-01	900 mm
Q2C-VFO-1200-01	1200 mm
Q2C-VFO-1500-01	1500 mm
Other lengths available	

Official Distribution Partner
Colterlec
Phone 1300 36 26 26
sales@colterlec.com.au | www.colterlec.com.au